Name
CPUPOWER.Sch

Name
SDRAM_IO.Sch

Name
NAND.Sch

Name
Ethernet.Sch

Name
POWER.Sch

Name
USBIO.Sch

Name
GPIO.Sch

Name
JTAG.Sch

# SheevaPlug (PowerPlug V1.3) GTI

Globalscale Technologies,Inc.

| | | | | | | | | |
|---|---|---|---|---|---|---|---|---|
| GLOBALSCALE www.globalscaletechnologies.com | Power Plug v1.0 | Date : 6-Sep-2009 | Time : 12:22:47 | Sheet No. 1 | Paper Size A3 | Designer : GTI-EE | Remark | Modify: SHEEVA V5.22 |
| | | File : GTI_A.Sch | | Total pages : 10 | | drawer : GTI-EE | | Print Area X:1550 Y:1110 |

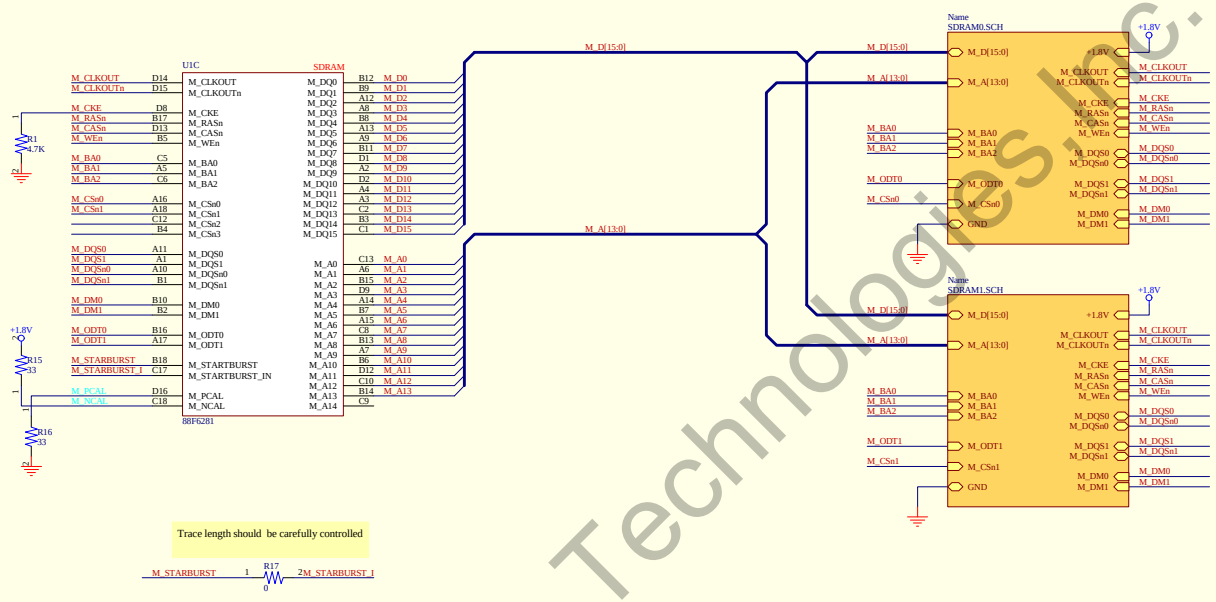


Globalscale Technologies Inc.

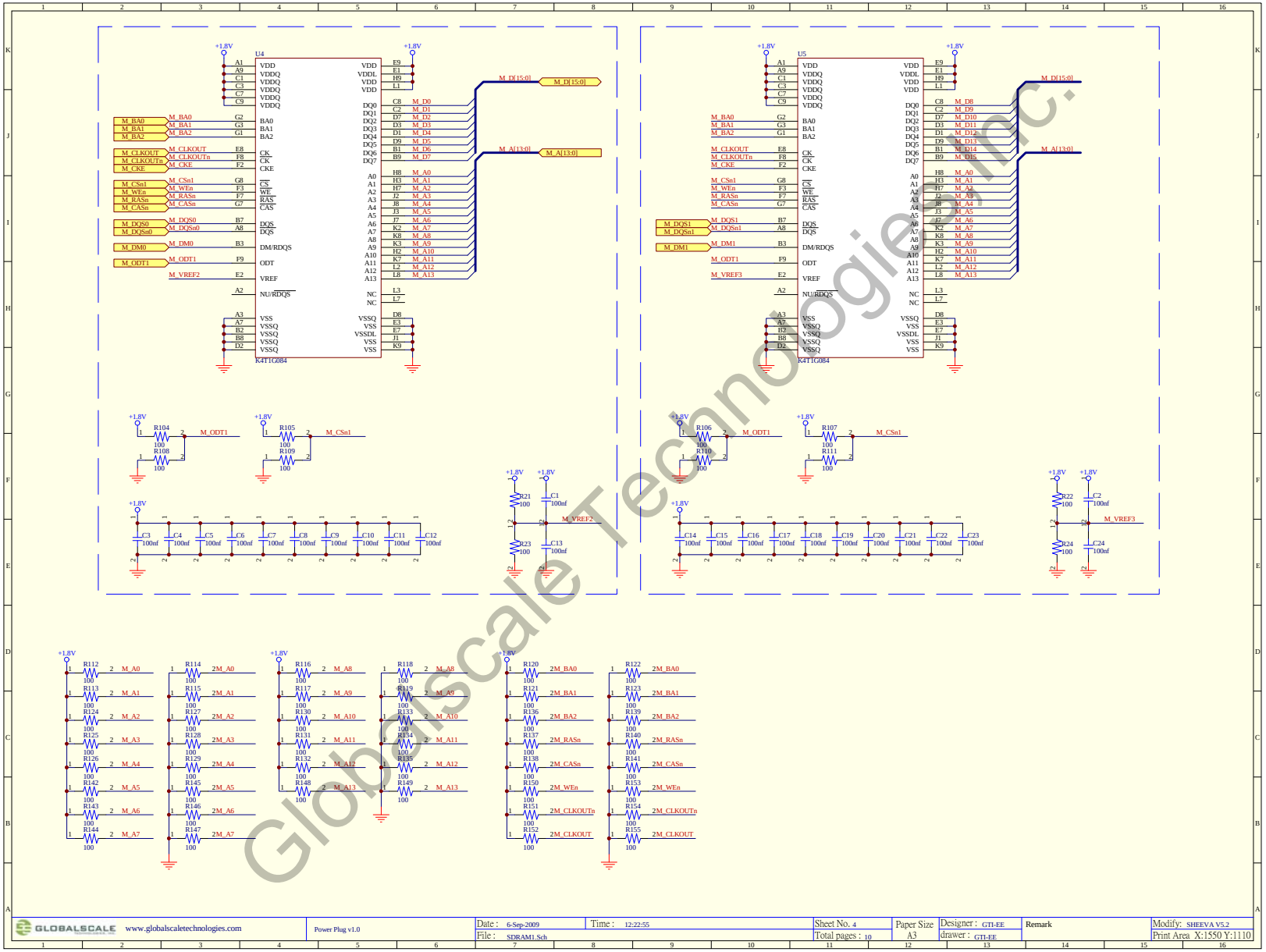


Globalscale Technologies Inc.

| | | | | | | | |
|---|---|---|---|---|---|---|---|
| GLOBALSCALE www.globalscaletechnologies.com | Power Plug v1.0 | Date : 6-Sep-2009 | Time : 12:22:55 | Sheet No. 4 | Paper Size A3 | Designer : GTI-EE | Remark | Modify: SHEEVA V5.2 |
| | | File : SDRAM1.Sch | | Total pages : 10 | | drawer : GTI-EE | | Print Area X:1550 Y:1110 |

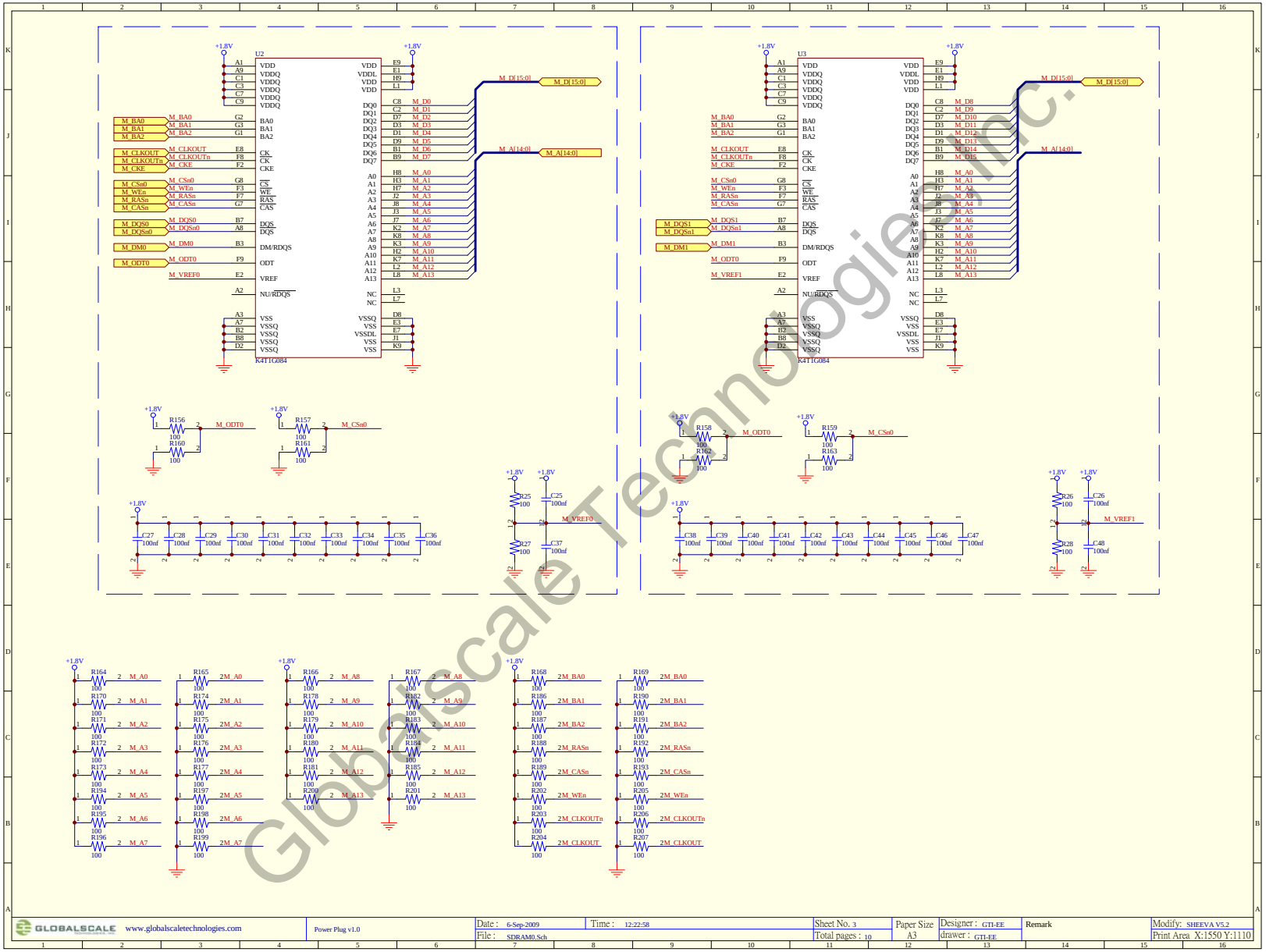


Globalscale Technologies Inc.

CPU_CLK Frequency Select
MPP2 : NF_D4
MPP5 : NF_D7
MPP19 : NF_D1
MPP10 : UA0_TXD

| MPP2 | MPP5 | MPP19 | MPP10 | |
|---|---|---|---|---|
| H | | | H | 0x9 : 1200MHz |
| H | H | | | 0xC : 1500MHz |

CPU_CLK to DDR CLK Ratio

| MPP33 | NF_ALE | NF_REn | NF_CLE | |
|---|---|---|---|---|
| | H | | | 0x4 : 1/4 CPU1200MHz DDR400MHz |
| | H | H | | 0x6 : 1/4 CPU1200MHz DDR400MHz |

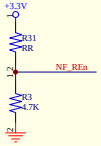


CPU_CLK to CPU L2 Clock Ratio
MPP3 : NF_D5

| MPP3 | MPP12 | NF_WEn | |
|---|---|---|---|
| | H | H | 0x3 : 1/3 CPU1200MHz L2CLOCK400MHz |
| | H | H | 0x3 : 1/3 CPU1500MHz L2CLOCK500MHz |

TWSI Serial ROM Initialization
MPP1 : NF_D3

| MPP1 | |
|---|---|
| L | 0 : Disabled |
| H | 1 : Enabled |

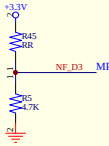


NOTE: MUST be externally pulled down to 0x0 during reset.
MPP18 : NF_D0

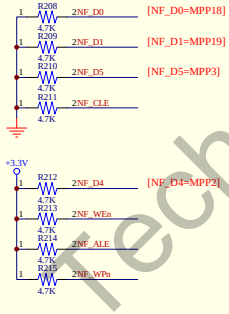


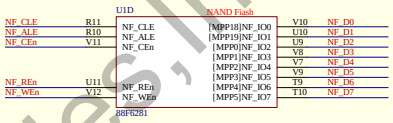


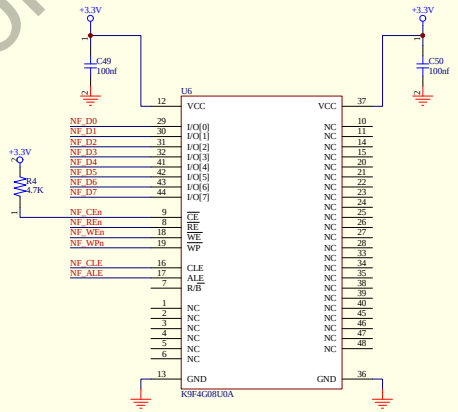


Globalscale Technologies,Inc.

Reset Configuration(Boot from NAND flash)

| GE_TXD2 | GE_TXD1 | GE_TXD0 | |
|---|---|---|---|
| H | | H | 0x5 : Boot from NAND flash |

SSCG
GE_TXD3
L — 0 : Enabled
H — 1 : Disabled

PCI Express Clock

GE_MDC
L — 0 : PEX_CLK Pins are input pins
H — 1 : PEX_CLK Pin are outptput pins

Used for internal testing

GE_TXCTL
Must be 0x0 during reset. Either leave the signal floating (internally pulled down to 0x0) or pull the signal to

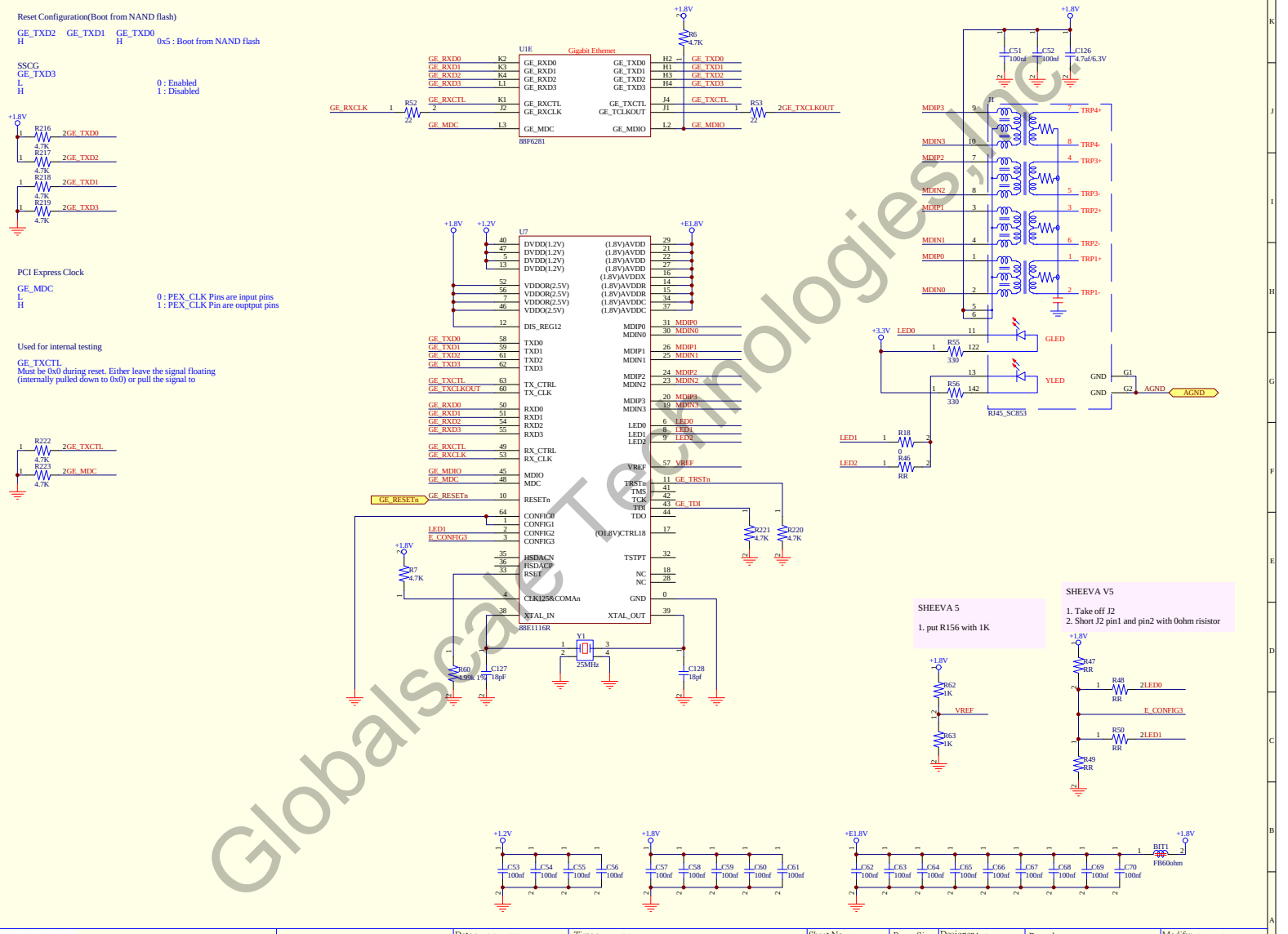


Globalscale Technologies,Inc.

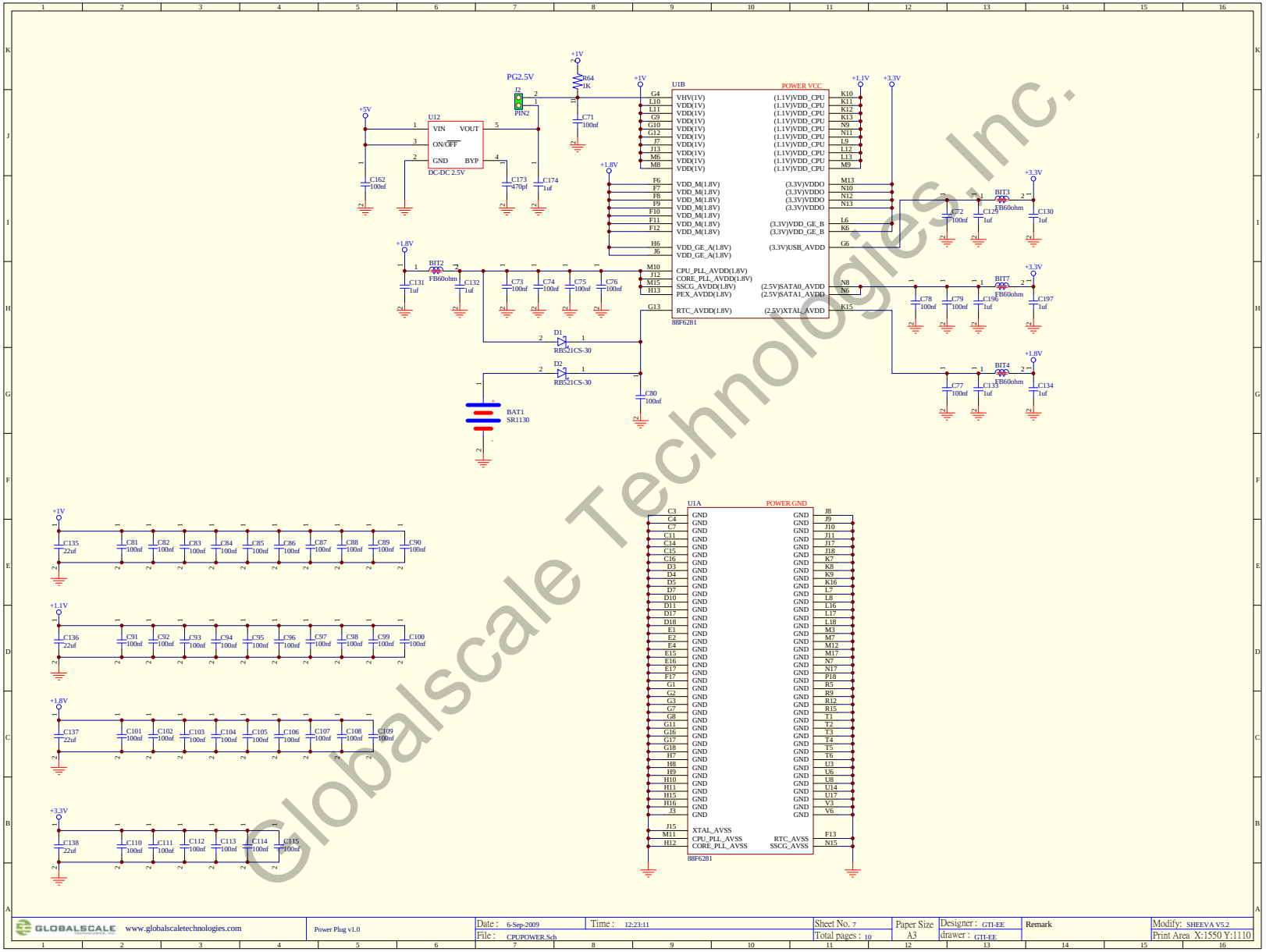


Globalscale Technologies, Inc.

| | | | | | | | |
|---|---|---|---|---|---|---|---|
| GLOBALSCALE www.globalscaletechnologies.com | Power Plug v1.0 | Date: 6-Sep-2009 | Time: 12:23:11 | Sheet No. 7 | Paper Size A3 | Designer: GTI-EE | Remark | Modify: SHEEVA V5.2 |
| | | File: CPUPOWER.Sch | | Total pages: 10 | | drawer: GTI-EE | | Print Area X:1550 Y:1110 |

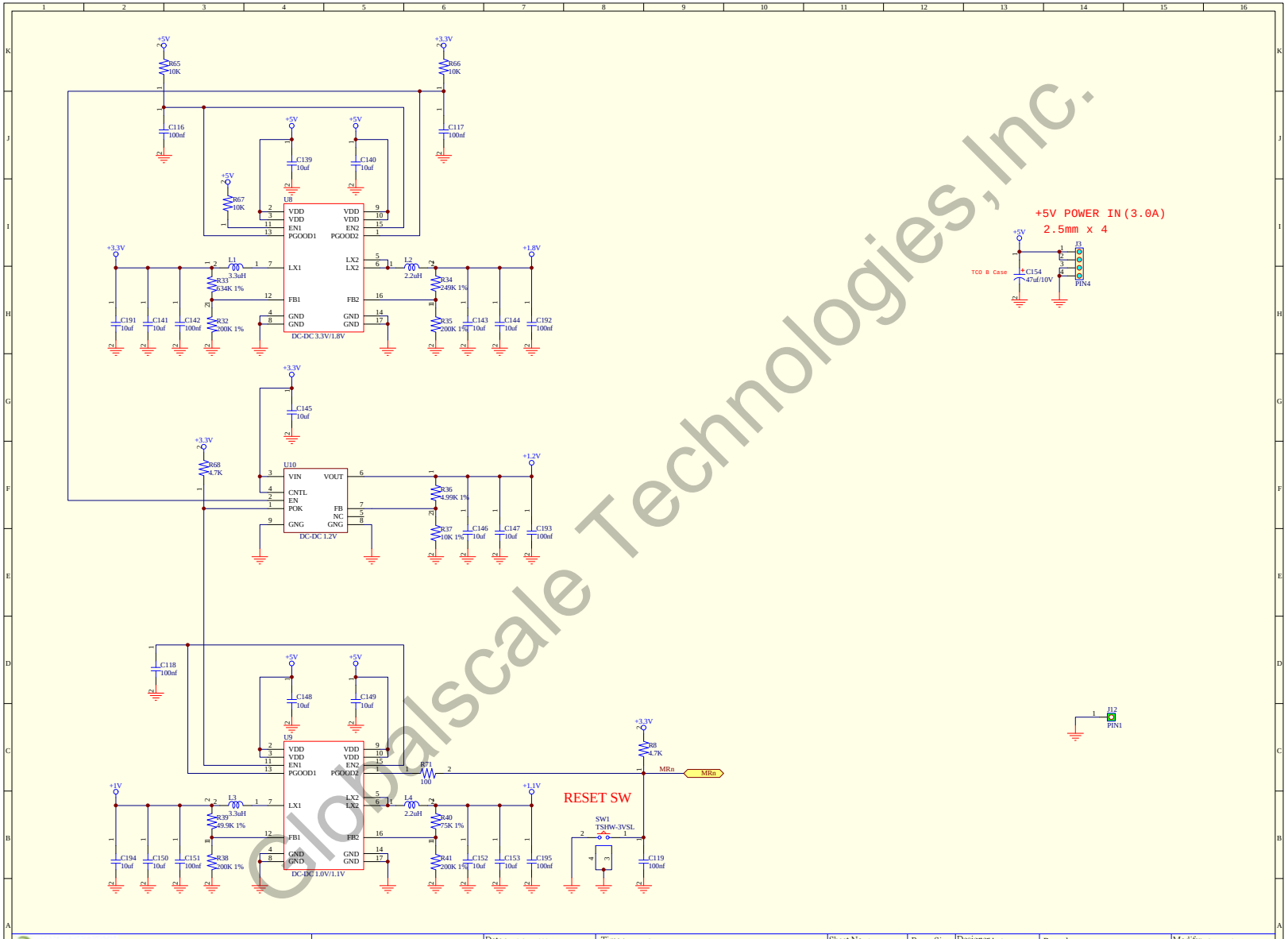


Globalscale Technologies,Inc.

| | | | | | | | |
|---|---|---|---|---|---|---|---|
| GLOBALSCALE www.globalscaletechnologies.com | Power Plug v1.0 | Date : 6-Sep-2009 | Time : 12:23:14 | Sheet No. 8 | Paper Size A3 | Designer : GTI-EE | Remark | Modify: SHEEVA V5.2 |
| | | File : POWER.Sch | | Total pages : 10 | | drawer : GTI-EE | | Print Area X:1550 Y:1110 |

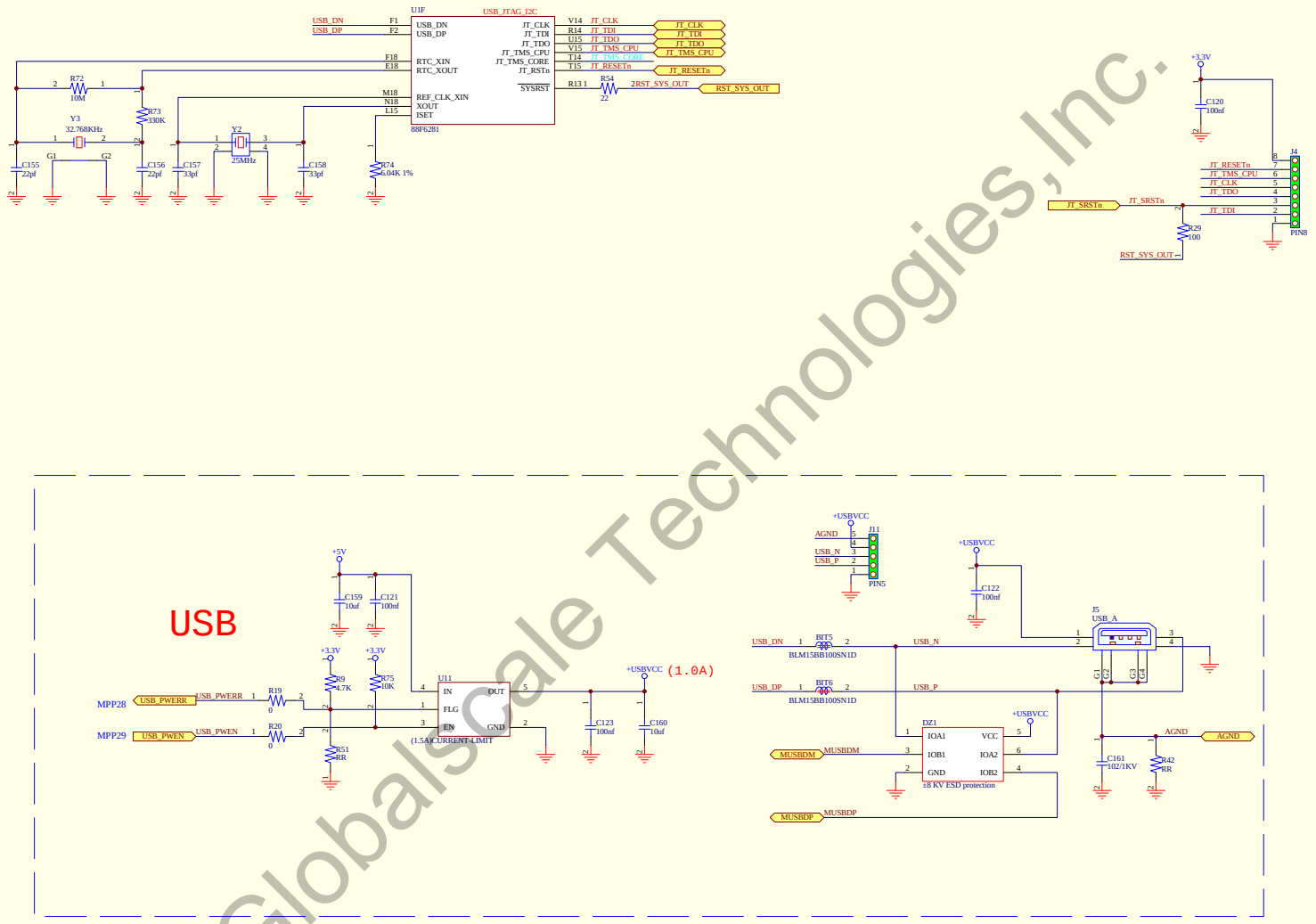


Globalscale Technologies,Inc.

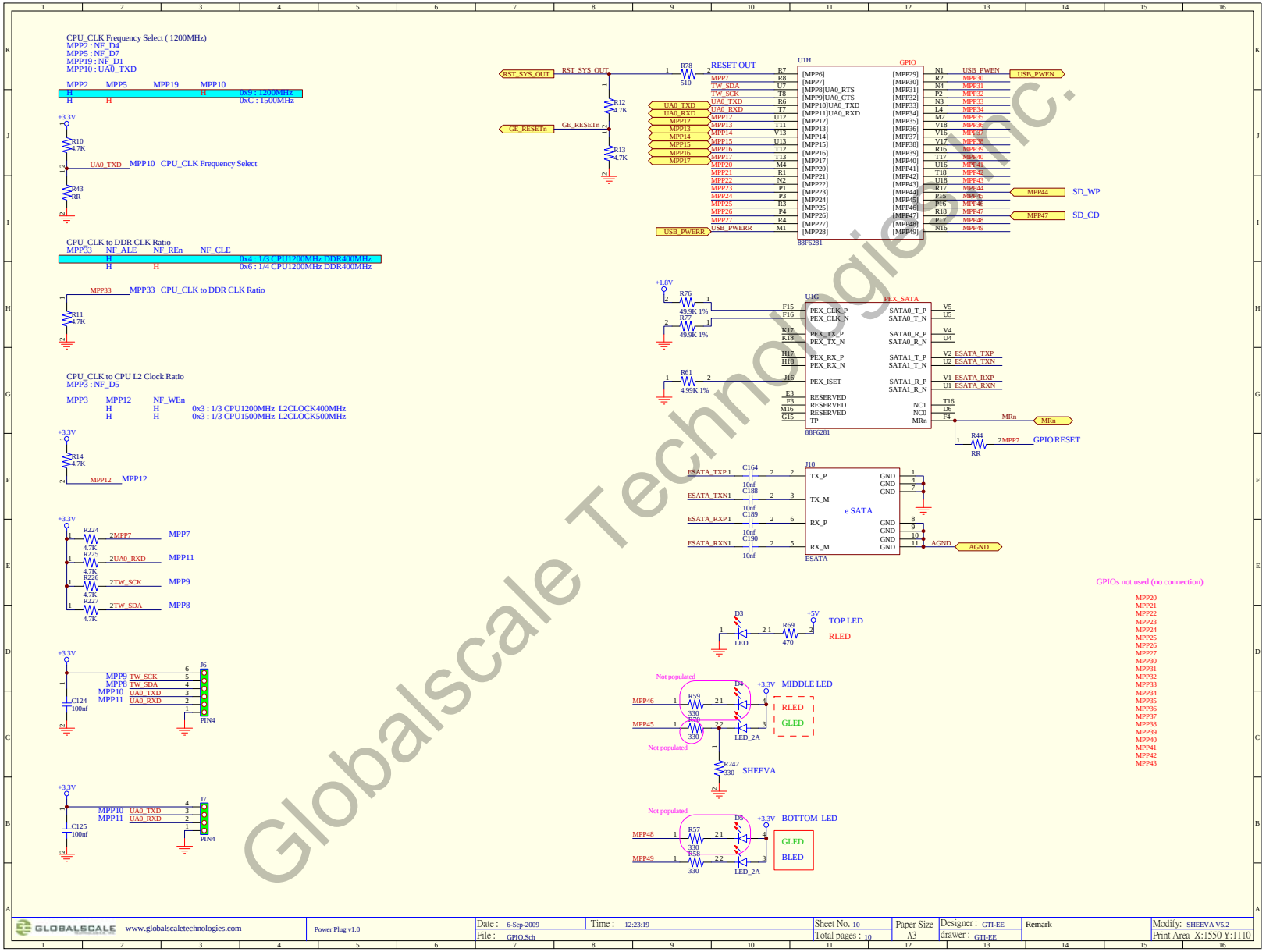


Globalscale Technologies Inc.

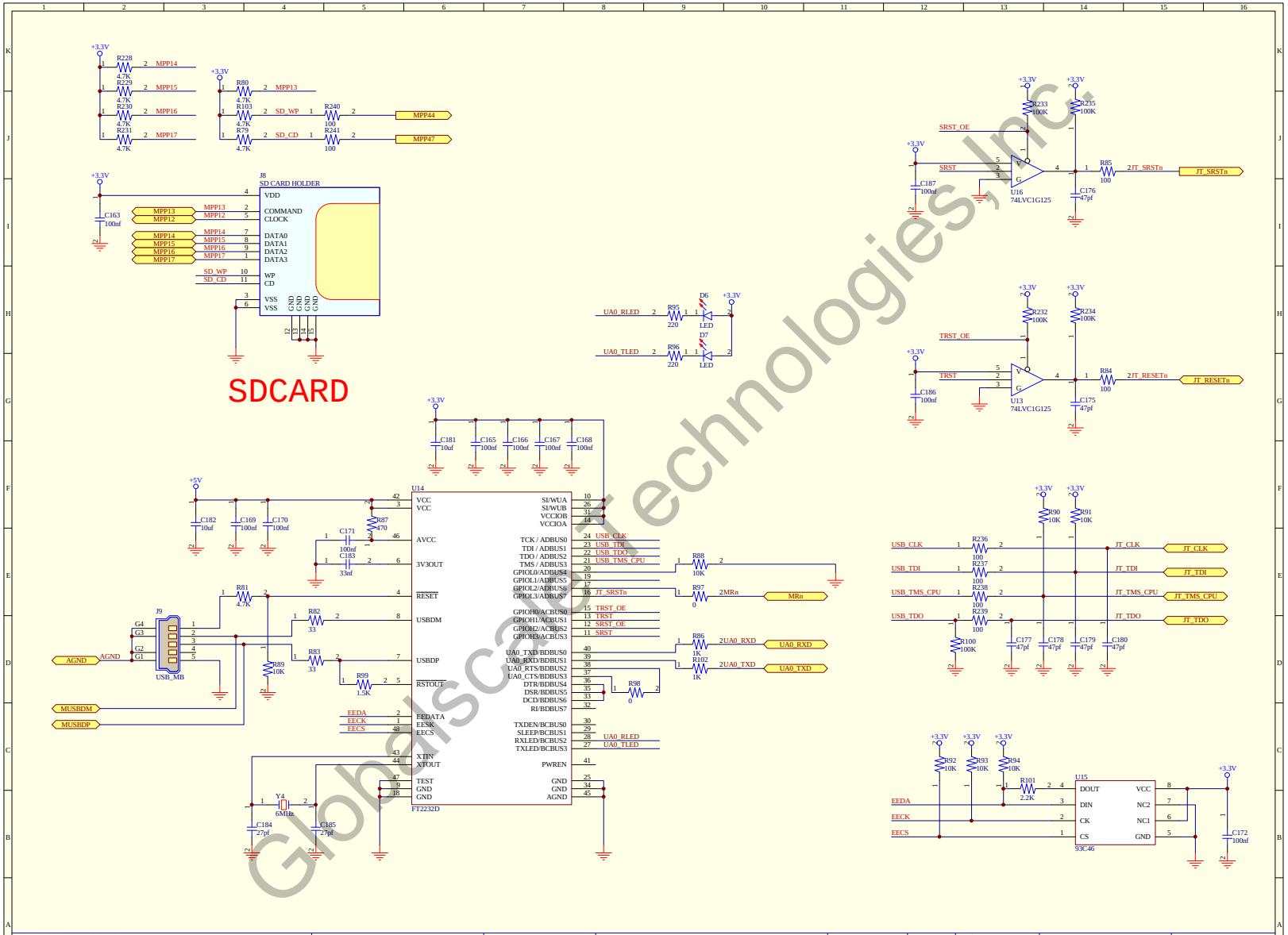


Globalscale Technologies, Inc.

| | | | | | | |
|---|---|---|---|---|---|---|
| GLOBALSCALE www.globalscaletechnologies.com | Power Plug v1.0 | Date: 6-Sep-2009 | Time: 12:23:22 | Sheet No. 10 | Paper Size A3 | Designer: GTI-EE |
| | | File: JTAG.Sch | | Total pages: 10 | | drawer: GTI-EE |

Remark

Modify: SHEEVA V5.2

Print Area X:1550 Y:1110